INSTRUCTION MANUAL

Version 3.0

Issued Oct. 05, 2018

Motorized Table

TAVOLA DOPPIA

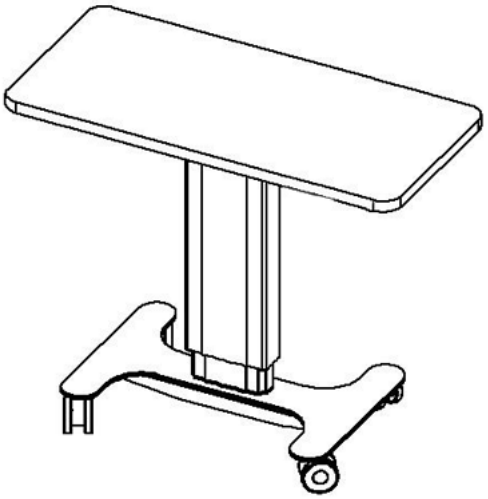

CE

Technical specifications

Height (without table top)	Min* 66 cm
	Max* 98 cm
	Stroke* 32 cm
Dimensions (without table top)	Width 60 cm
	Depth 40 cm
	Weight 18 kg
Elevating speed	Load dependent 20-30 mm/s
Table lifting power	Max 50 kg
Height adjustment mechanism	Electrical
Height adjusment control	Up/down switch, sited under the table top
Power supply voltage/frequency	115/230 V ~ 50/60 Hz
Current absorbed without connected instruments	220-240 V~ version: max 0.8A 115 V~ version: max 1.6A
Current absorbed with connected instruments	Max 3A
Main fuse located in the fuse-holder sited next to power cord socket	T 4A 250V 5x20
Duty cycle of electrical motor	Max 10%. After continuous operation of 2min it must be cooled down for at least 18min.
2 auxiliary max 200W voltage power supply sockets for instruments	

*can slightly vary

Technical data may be subject to modification.

Before assembling and using the instrument, you must read this manual carefully.

Safety precaution

1. This equipment must not be used in an area that is in danger of explosions and in the presence of flammable, explosive, or volatile solvent such as alcohol, benzene or similar chemicals.

2. Do not put or use this device in humid rooms. Humidity should be maintained between 50% and 80% for normal operation. Do not expose the device to water splashes, dripping water, or sprayed water.
3. Only person who has undergone proper training and instructions are authorized
to install and maintain this equipment.

4. Do not force cable connections. If a cable does not connect easily, be sure that the connector (plug) is appropriate for the receptacle (socket). If you cause any damage to a cable connector(s) or receptacle(s), let the damage(s) be repaired by an authorized service technician.

5. Please do not pull on any cable. Always hold on to the plug when disconnecting cables.

6. Before every operation, visually check the equipment for exterior mechanical damage(s) and for proper function.

7. Do not cover any ventilation grids or slits. Immediately turn off and unplug any equipment that gives off smoke, sparks, strange noises, or odors.

"Warning” indicates the presence of a hazard that could result in severe personal injury, death or substantial property damage if ignored.

WARNING: TO PREVENT ELECTRICAL CHOCK, DO NOT REMOVE COVER

Disposal

1. When this crossed-out wheeled bin symbol is attached to a product it means the product is covered by the European Directive 2002/96/EC.
2. All electrical and electronic products should be disposed of separately from the municipal waste stream via designated collection facilities appointed by the government or the local authorities.
3. The correct disposal of your old appliance will help prevent potential negative consequences for the environment and human health.
4. For more detailed information about disposal of your old appliance, please contact your city office, waste governing ordinances and recycling plans regarding disposal or recycling of instrument or device components.

When disposing packing materials, sort them by the materials and follow local governing ordinances and recycling plans.

WARNING!

Any replacements made without coordination with manufacturer are strictly prohibited.

If replacements are made, the unit must be tested to ensure the continued safe operation.

WARNING!

Connecting electrical equipment to the multiple socket-outlet effectively leads to creating a medical equipment SYSTEM and result can be reduced level of safety. Requirements for medical equipment system follow IEC 60601-1.

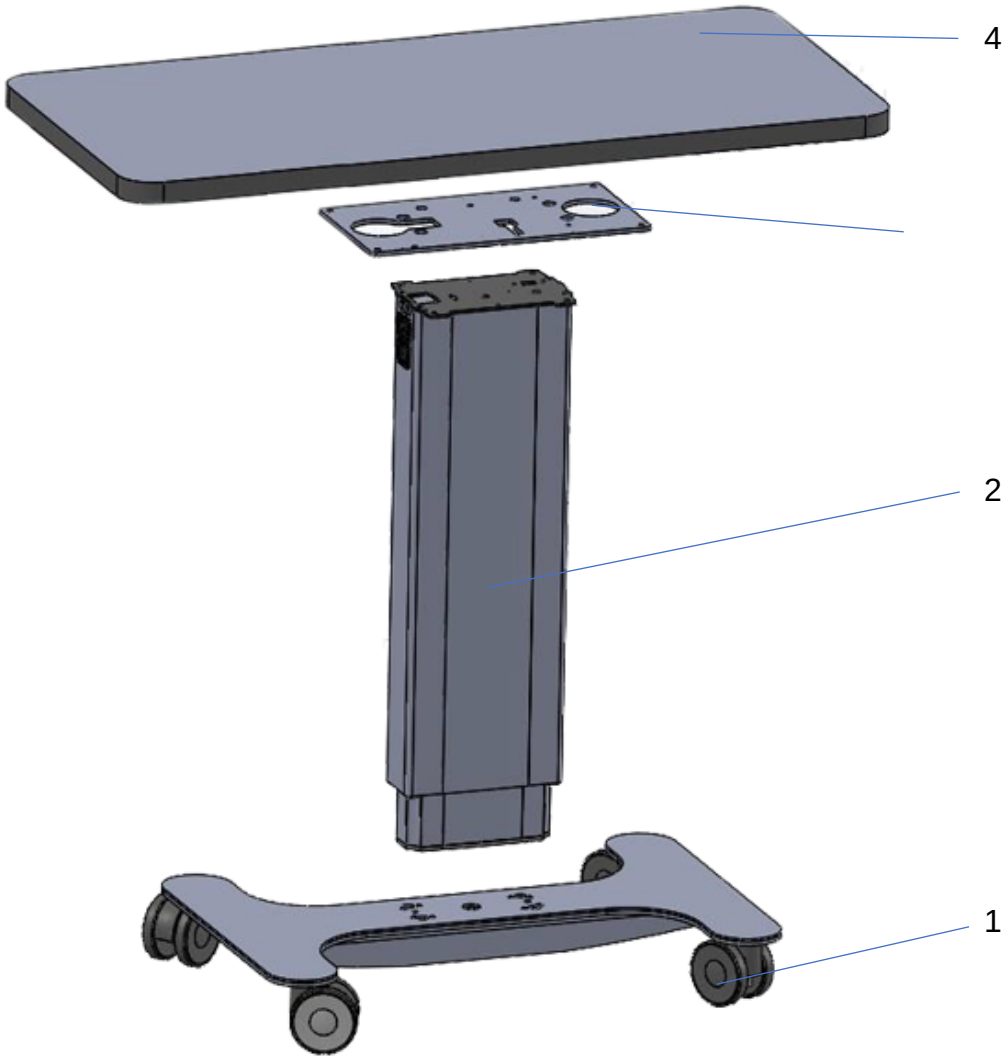

1 Base on wheels
2 Elevating column
3 Table top support plate
4 Table top*

Picture 1. Exploded view of the table

Assembling instructions

Picture 1 shows exploded view of the table.

To assemble the table, operate as follows:

1. *Assemble the column (2) to the base (1).*

   Turn upside-down the column (2). Turn upside-down the base (1) and put it on the column. Attach the base to the column with the four hexagonal head screws (6 mm).
   Connect cable from elevating column to the power input socket and fuse under the base:
   Connect Brown wire to the fuse
   Connect Blue wire to the power input socket.
   Connect Green/yellow wire to the ground pin of power input socket.

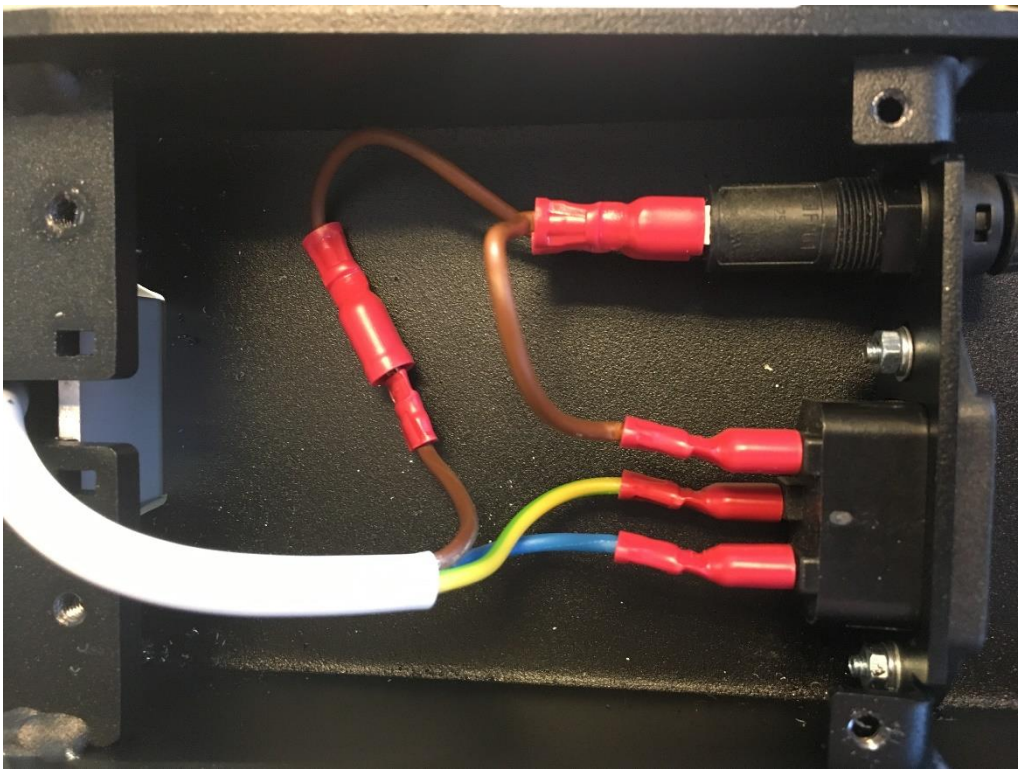

Put on protective lid.

Turn upside-up the table.

2. *Assemble the table top support plate (4) to the column (2) with the four screws.*
3. *Assemble the table top (5)(optional) to the table top support plate (4)* with the four screws M6x20, using the four holes in the corners of table support plate(4).

Insert the main power cable into the socket.

WARNING! In order to avoid the risk of electric shock, the unit must be connected to power outlet with protective earthing.

Insert the plug into a wall main power outlet.

For safety reasons, wall power outlet must be easily accessible, unobstructed by Unit or any other item.

4. *Connect the power cord* to the outlet (7) presented under the base.

5. *Configuring elevating column (2) for single column mode.*
   For E version, skip this chapter.

Elevating column can be set for working as:

- Single column
- Double column – master mode
- Double column – slave mode

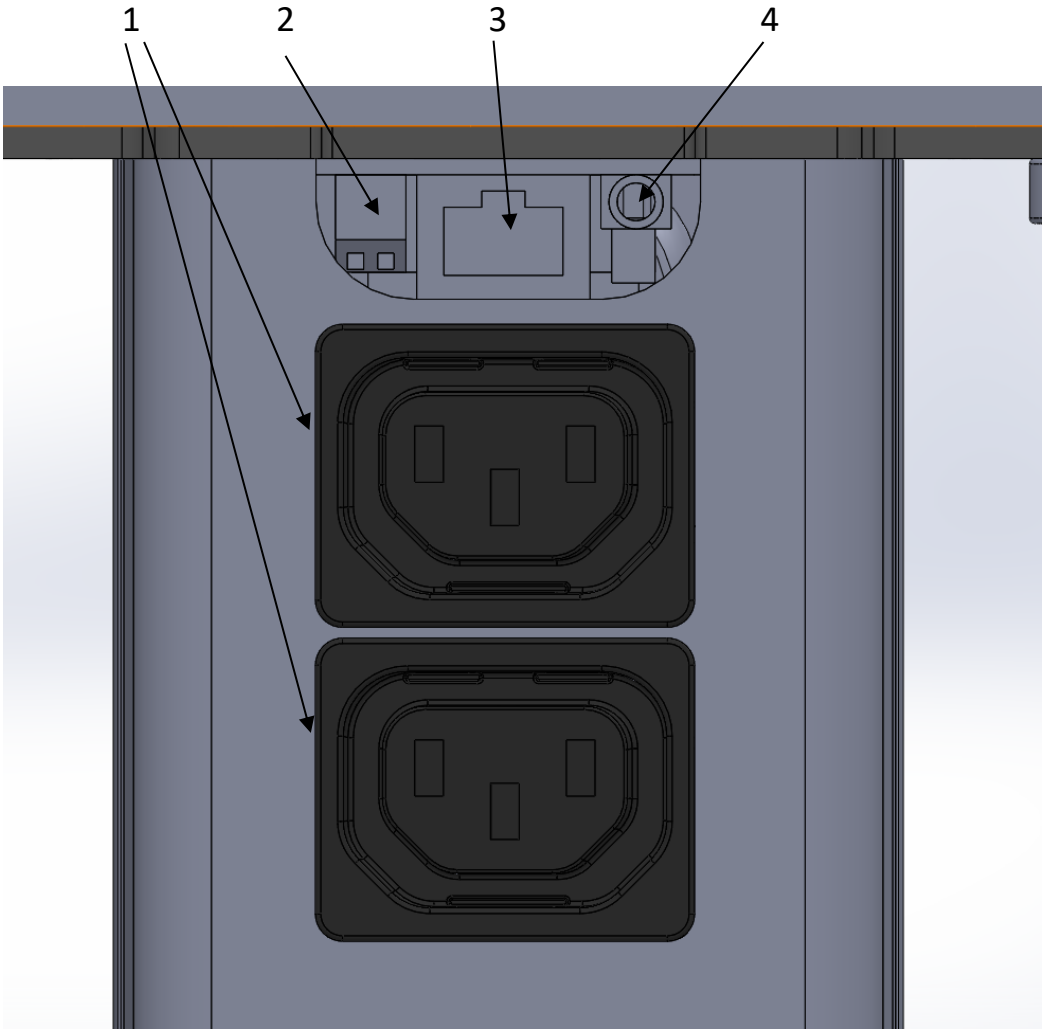

Picture 2

Connections on elevating column:

1 - Outlet 230V max 600W
2 – Mode switch
3 – Date cable to next column (in Double mode)
4 – UP/DOWN switch (connects when column is working in Single or Double Master modes)

True table of Mode switch:

Switch #1	Switch #2	Description
ON	**X**	**Column works in Single mode**
OFF	ON	Column works as Master in Double mode
OFF	OFF	Column works as Slave in Double mode

6. *Assemble elevating column (2) to table top support plate(4)*

Put elevating column to its place on the table top support plate and fasten it by using supplied no. 4 screws M6x20 and spring washers.

7. Put the plug of the power cord in a power supply outlet.

8. Connect UP/DOWN switch.

Operating instructions

Turning the table ON

Turn ON (1) the main power switch (8).

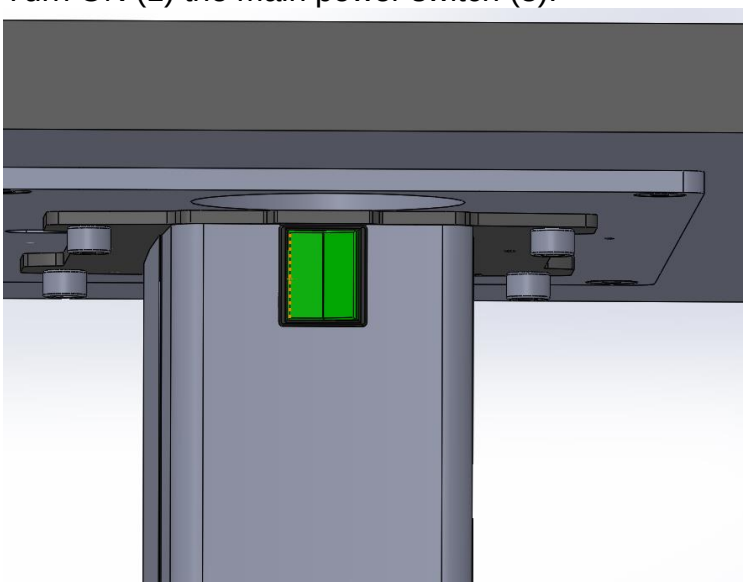

The green light inside the switch will go ON.

To change the height of the table top

- Push the corresponding button for height adjustment of the table.
- Push button marked “+” for movement UP
- Push button marked “-“ for movement DOWN

Auxiliary outlets

One auxiliary power supply outlets are located on the side the elevating column (position 1 in picture 2).

Mains voltage is presented on the outlets as long as mains power cord is inserted in to the wall socket and power switch in turned ON.

Maintenance

Attention: before any maintenance operation, be sure the main power switch is turned OFF (0) and take off the plug from the wall socket.

Replacing main protection fuses

Main delayed fuses are sited in the fuse-holder located just under the main power supply socket on the bottom of the Unit.

Replace them only with fuses of same value as indicated on the label sited on the support bracket of instrument table top.

Cleaning

Clean the coated surfaces with a cloth moistened (never dripping wet). Please do not use any abrasive or aggressive cleaning supplies. Make sure that no moisture gets in between the keyboard keys. It is advisable to protect the instrument table against dust with a protective hood at the end of each working day, simply because open measuring and examining instruments are inherently sensitive to dust.

Do not use any cleaning agent as they may have a corrosive effect.

Do not expose the device to humidity, rain, sand or excessive heat (caused by heating equipment or direct sunlight),

Storage temperature: 0°C to +65°C

Operating temperature: +5°C to +40°C

To prevent electrical shock, do not remove side covers of the device.

All maintenance and repairing works can be carried out by the manufacturer`s authorized technicians only.

Labels

The label with CE mark and product electrical data is located on the support bracket of instrument table top.

www.usophthalmic.com
info@usophthalmic.com
+1 888.881.1122