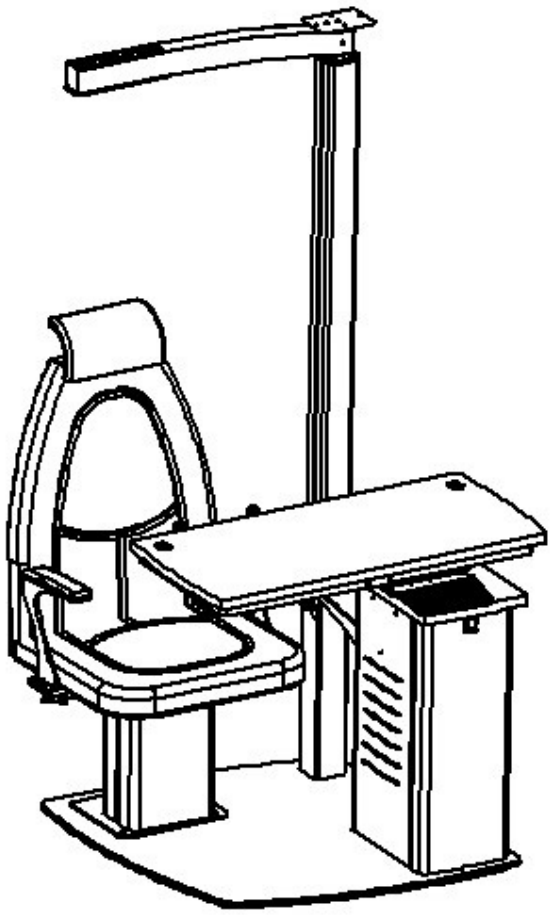

CAPRI

Refraction Unit

User Manual

Version 1.0 2022-07-03

US OPHTHALMIC LLC
NW 14 ST STE 105 Doral FL 33172

CE

1. Technical specification

Dimensions	Width 97 cm
	Depth 162 cm
Power supply voltage/frequency	220-240V/110-120V ~ 50/60 Hz
Current absorbed	220-240 V~ max 1.4 A 110-120V~ max 3A
2 main fuses located in the fuse-holder on the back side of the column base	T6.3A250V
Chair lifting range	52-67 cm / 20”-26”
Chair lifting power	Max 160 kg / 352 lbs
Max weight of the instruments(1st – 2nd)	15kg – 20kg
Overhead lamp bulb	LED module 700mA
Power supply voltage of instrument outlet	From 5V to 20V AC From 6V to 23V DC
Maximum power supplied by instrument outlet	50 VA
Instrument light intensity controlled by means of touch panel	
Overhead lamp light intensity controlled by means of touch panel	
Chin-rest mounting support supplied	

Technical data may be subject to modification

Before assembling and using the instrument, you must read this manual carefully.

Safety precaution

1. This equipment must not be used in an area that is in danger of explosions and in the presence of flammable, explosive, or volatile solvent such as alcohol, benzene or similar chemicals.

2. Do not put or use this device in humid rooms. Humidity should be maintained
between 50% and 80% for normal operation. Do not expose the device to water
splashes, dripping water, or sprayed water.

3. Only person who has undergone proper training and instructions are authorized to install and maintain this equipment.

4. Do not force cable connections. If a cable does not connect easily, be sure that
the connector (plug) is appropriate for the receptacle (socket). If you cause any
damage to a cable connector(s) or receptacle(s), let the damage(s) be repaired
by an authorized service technician.

5. Please do not pull on any cable. Always hold on to the plug when disconnecting
cables.

6. Before every operation, visually check the equipment for exterior mechanical
damage(s) and for proper function.

7. Do not cover any ventilation grids or slits. Immediately turn off and unplug any
equipment that gives off smoke, sparks, strange noises, or odors.



"Warning" indicates the presence of a hazard that could result in severe personal injury, death or substantial property damage if ignored.



WARNING: TO PREVENT ELECTRICAL CHOCK, DO NOT REMOVE COVER

Disposal



1. When this crossed-out wheeled bin symbol is attached to a product it means the product is covered by the European Directive 2002/96/EC.
2. All electrical and electronic products should be disposed of separately from the municipal waste stream via designated collection facilities appointed by the government or the local authorities.
3. The correct disposal of your old appliance will help prevent potential negative consequences for the environment and human health.
4. For more detailed information about disposal of your old appliance, please contact your city office, wastel governing ordinances and recycling plans regarding disposal or recycling of instrument or device components.

When disposing packing materials, sort them by the materials and follow local governing ordinances and recycling plans.

WARNING!
Any replacements made without coordination with manufacturer are strictly prohibited.
If replacements are made, the unit must be tested to ensure the continued safe operation.

WARNING!
Connecting electrical equipment to the multiple socket-outlet effectively leads to creating a medical equipment SYSTEM and result can be reduced level of safety. Requirements for medical equipment system follow IEC 60601-1.

WARNING!
To avoid risk of electric shock, this equipment must only be connected to a supply mains with protective earth.

2. Installation

Refraction unit can be delivered semi assembled or fully disassembled.

Semi assembled unit

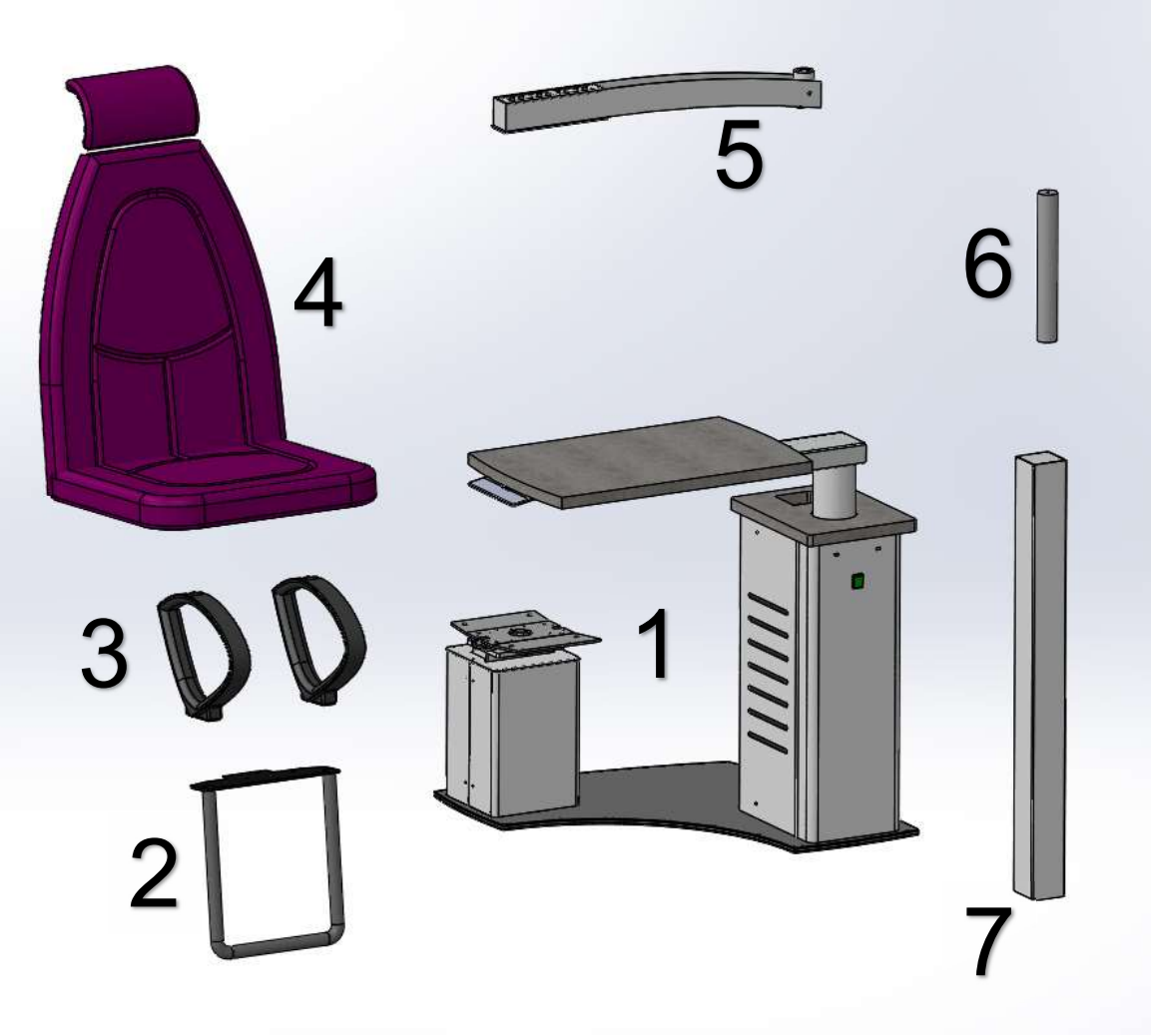

1. Main body with chair column on base plate
2. Footrest (optional)
3. Arm rests

4. Patient chair
5. Overhead lamp
6. Spigot for counterbalanced phoropter arm
7. Projector column

Fully disassembled unit

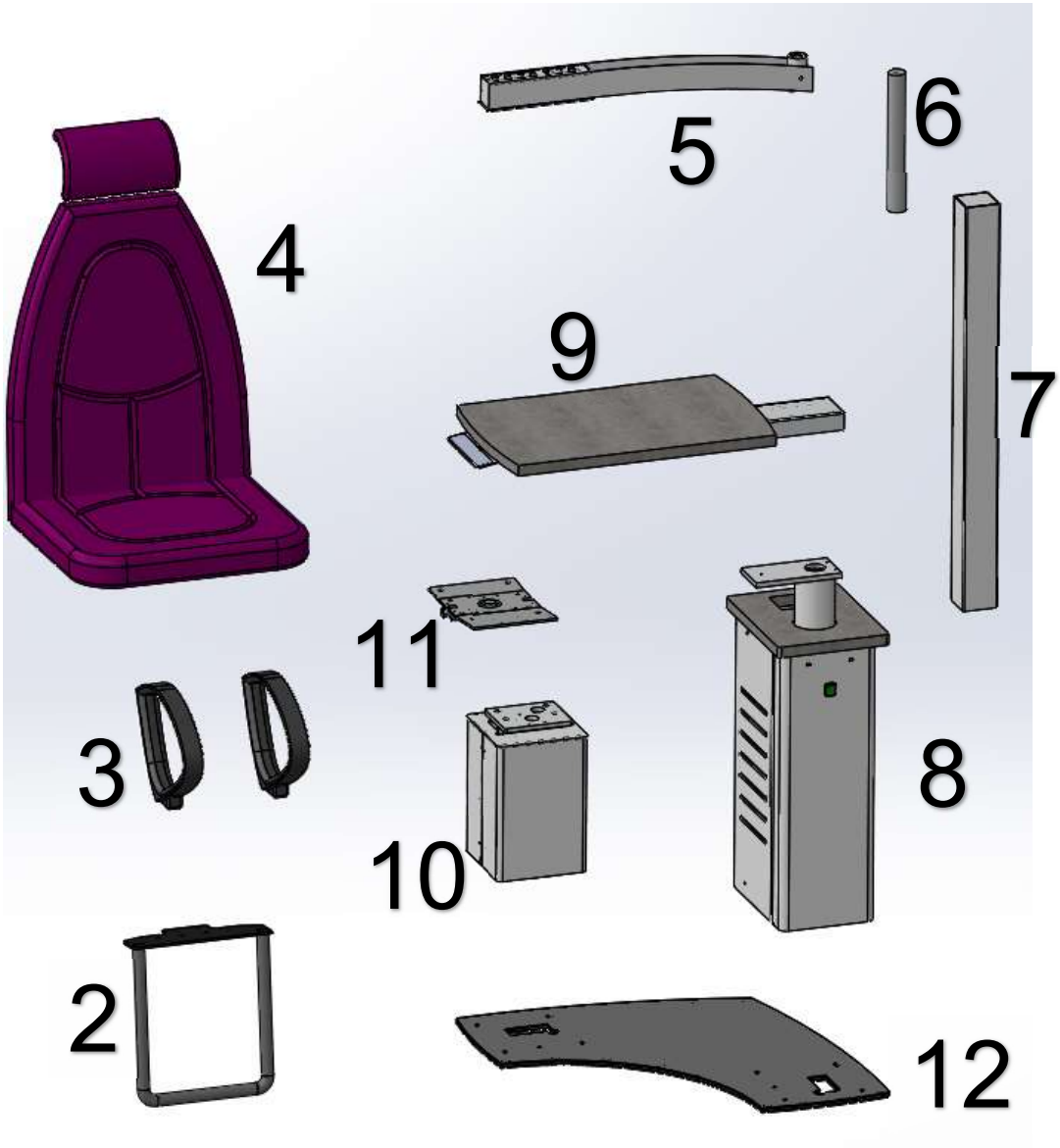

2. Footrest (optional)
3. Arm rests
4. Patient chair
5. Overhead lamp

6. Spigot for counterbalanced phoropter arm
7. Projector column
8. Main console
9. Instrument tabletop
10. Chair column
11. Chair rotating assembly
12. Base plate

Refraction unit can be assembled as right-handed or left-handed version

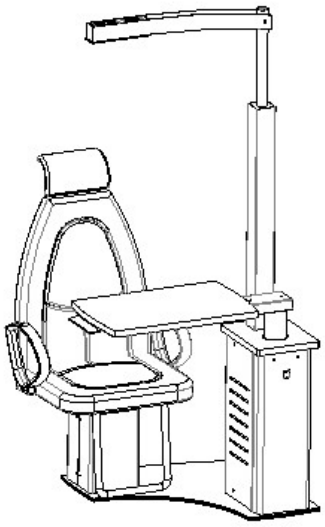

Right-handed version

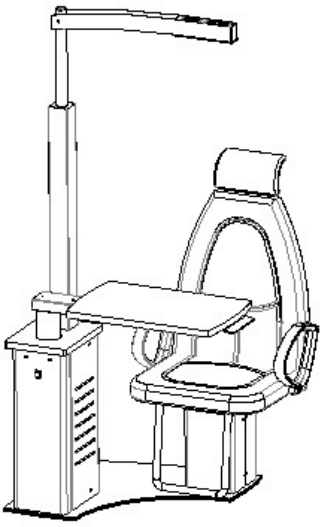

Left-handed version

!!! When taking refraction unit off the pallet, stick up supplied self-adhesive pads on the bottom side of base plate as shown in picture below.

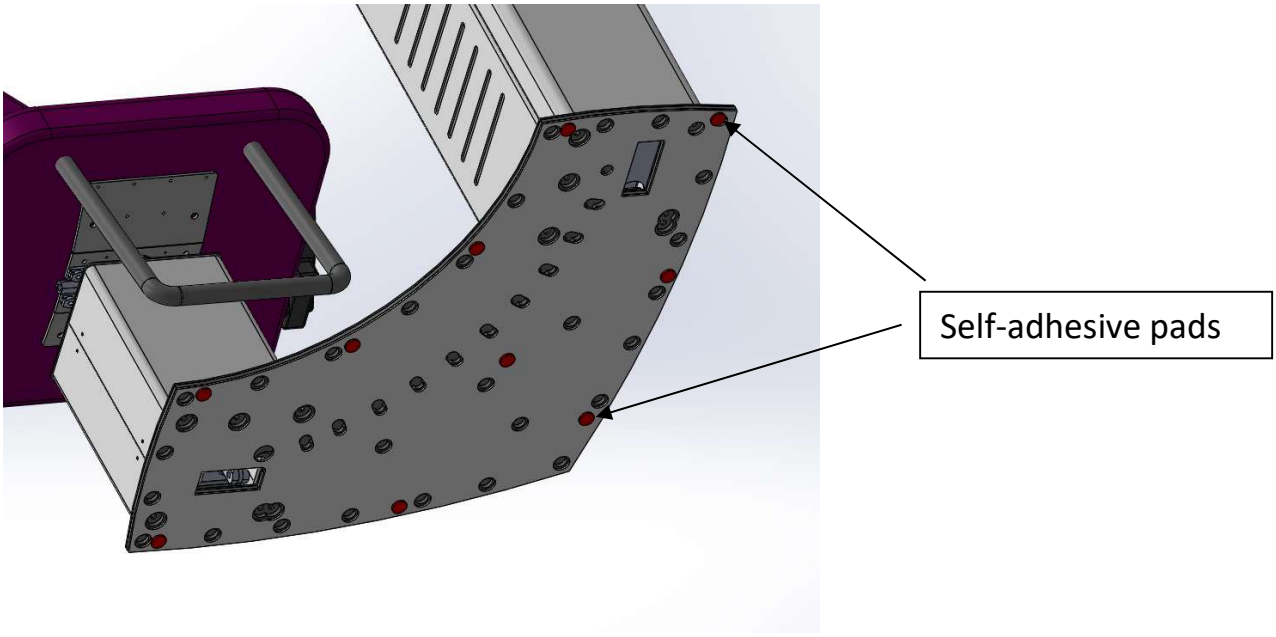

2.1 Assembling

Decide what the version of the unit you want to assemble.

In this manual, assembling of right-handed version is shown.

2.1.1. Assembling the chair column to the base plate

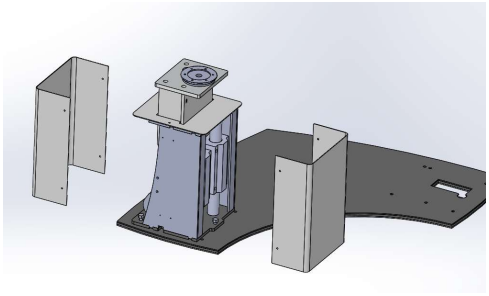

Put chair column on the base plate and fix it with the 3 bolts M8



Connect chair cable

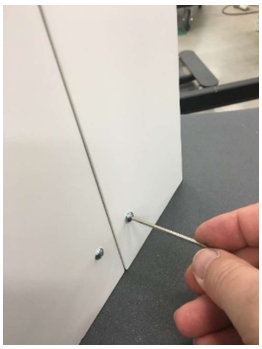

Put on and fix column lids

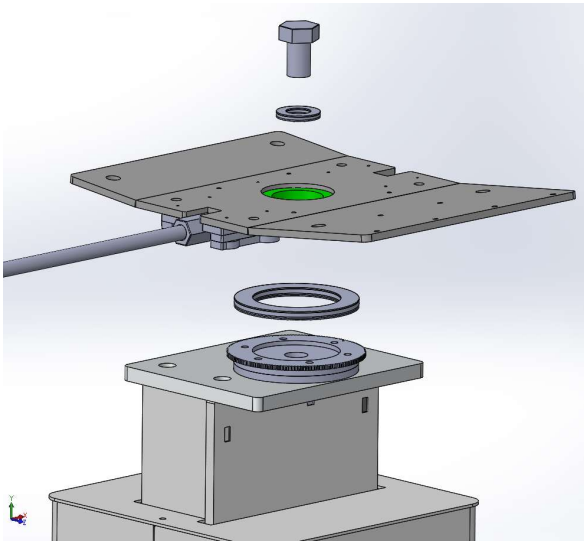

Put on and fix chair rotating assembly

2.1.2. Assembling the main console to the base plate

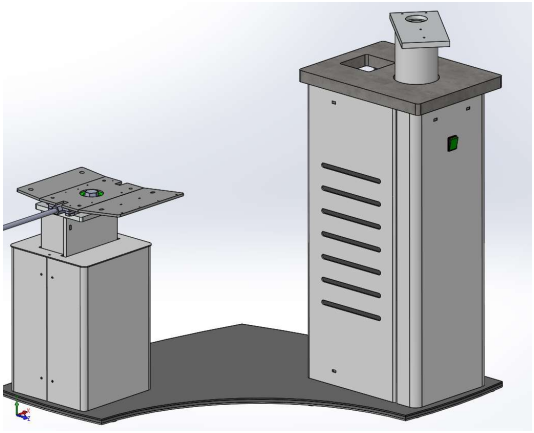

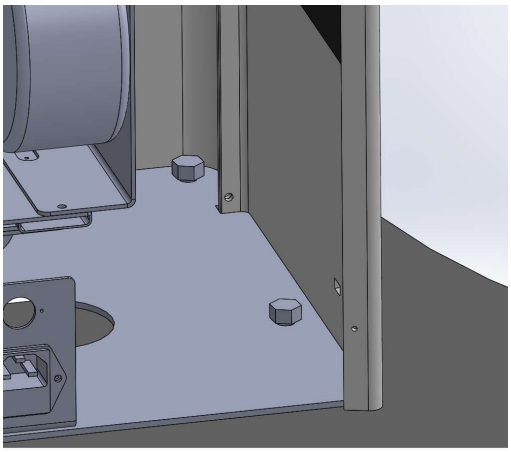

Put main console on the base plate and fix it with 4 bolts M8



Connect 4-pin plug and socket of chair cable

Electrical block can be positioned in right- or left- handed position.

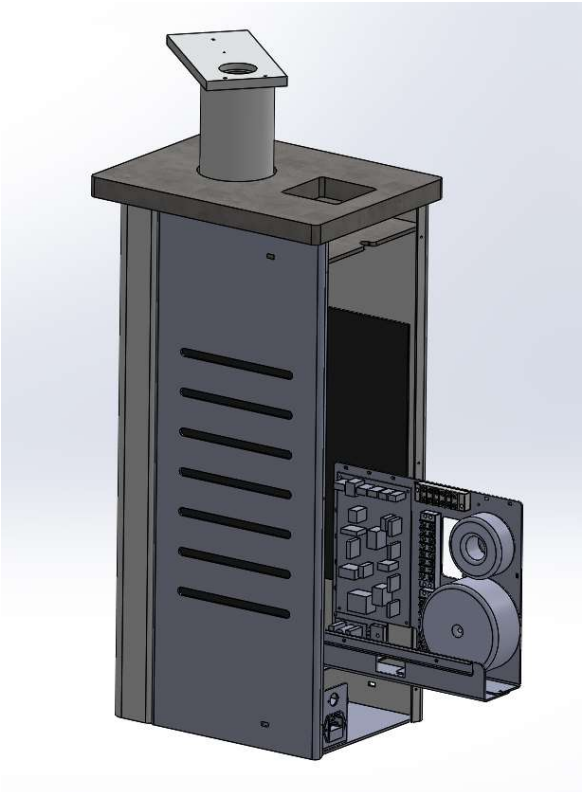

Left-handed

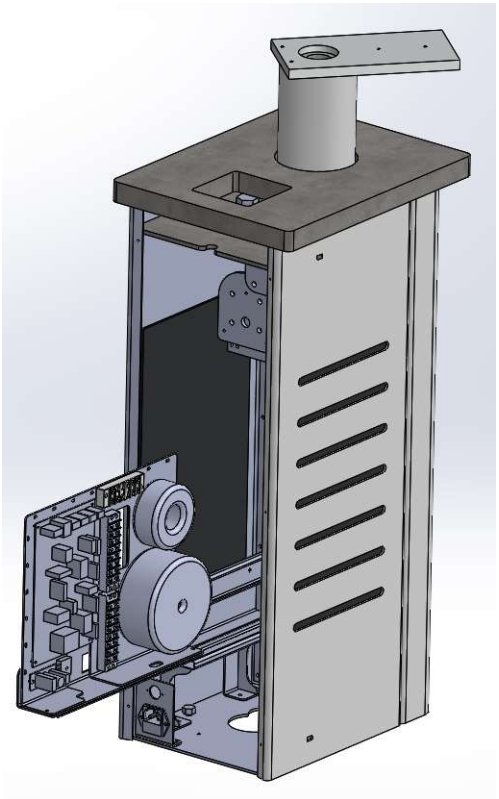

Right-handed

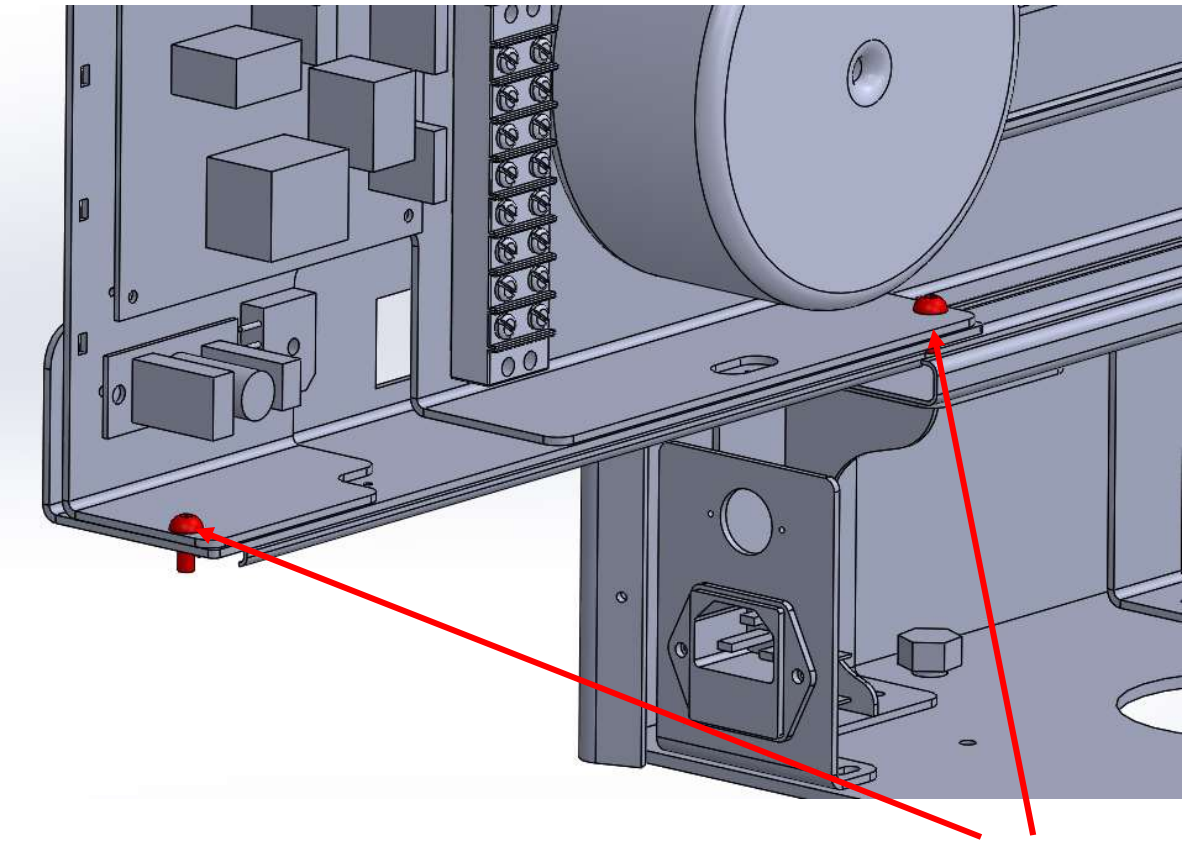

In order to turn electrical block, you need to unscrew two screws M4

Table lock assembly can be configurated as right- or left- handed version

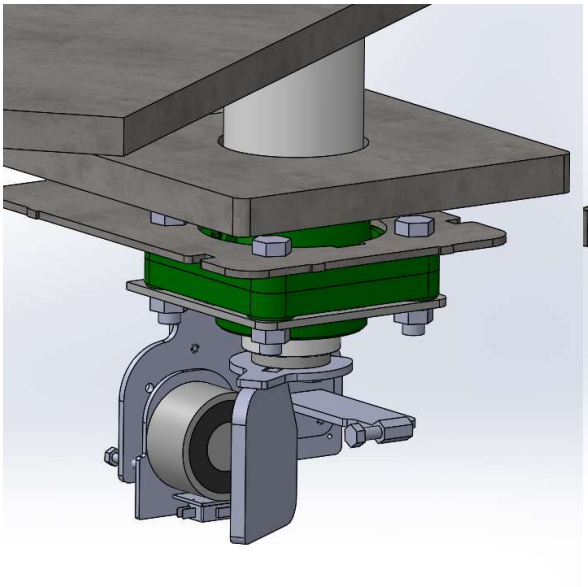

Right-handed configuration

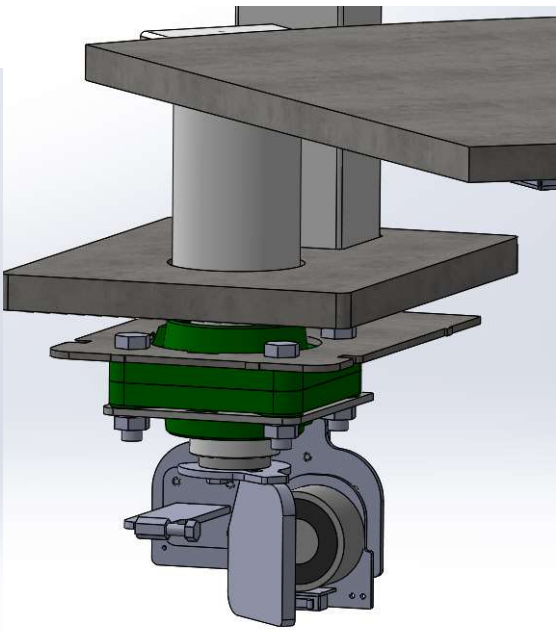

Left-handed configuration

2.1.3. Assembling instrument table tope to the main console

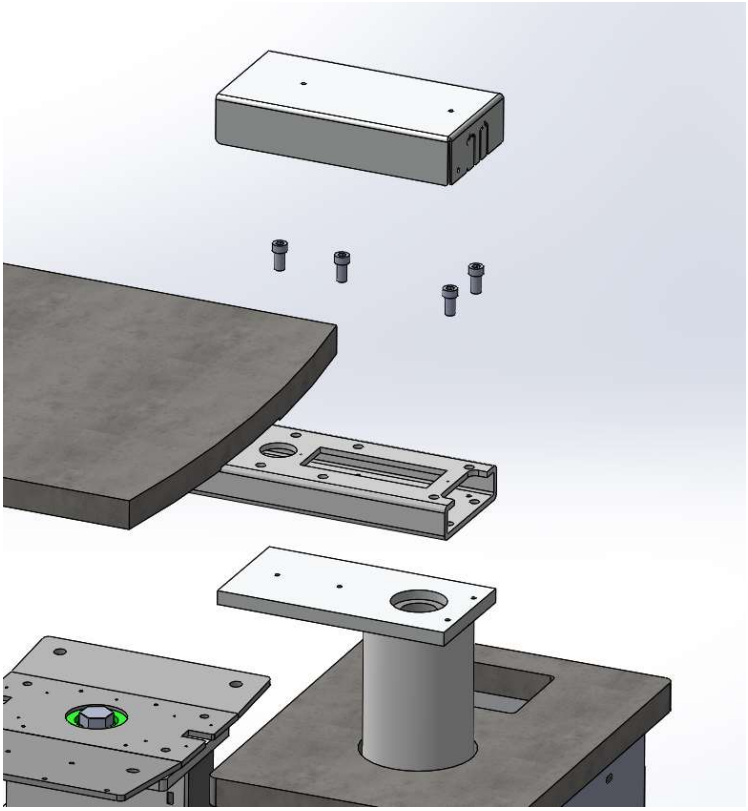

Put table top on the swiveling arm and fasten it with 4 screws M8

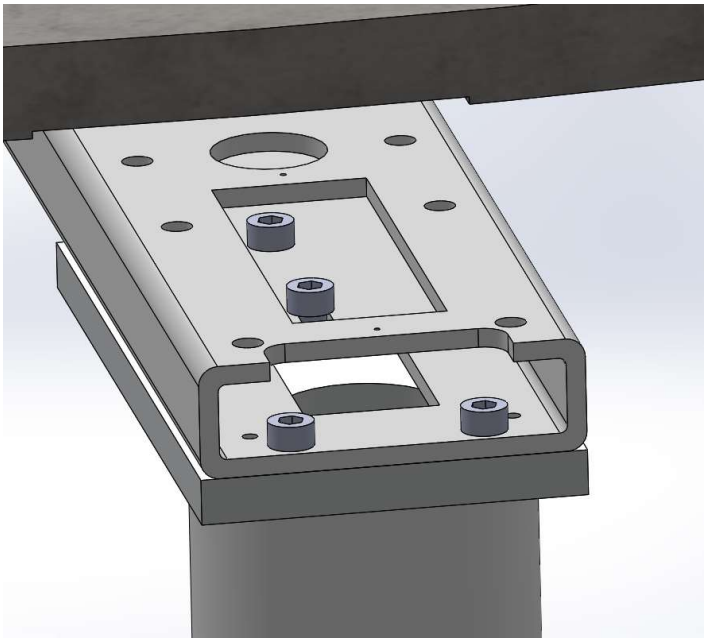

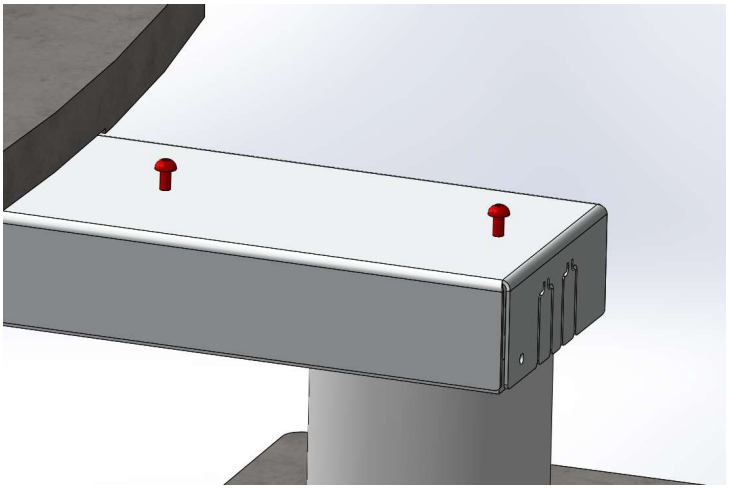

Connect cables, put on the lid and fasten it.

2.1.4. Assembling the chart projector column.

1. Insert the chart projector's power cable into the hole located on the upper back side of the column tube (remove the plug from the cable, if present) and push it until it goes out from the other side of the tube
2. The cable of overhead lamp is already inserted into the tube.

3. Connect the cables coming from the lamp with the corresponding cables inside the tube.
4. Place the overhead lamp on the tube.
5. Connect the cables coming from the projector with the corresponding cables coming from the column base identified with the "projector" label (Pay attention to connect yellow/green cable with the yellow/green corresponding one. The other two couple of cables can be connected indifferently).
6. Connect the cables coming from the lamp with the corresponding cables coming from the column base identified with the "lamp" label.
7. Place the tube in its seat.
8. Tighten the tube by means of nut M10 inside the main console.

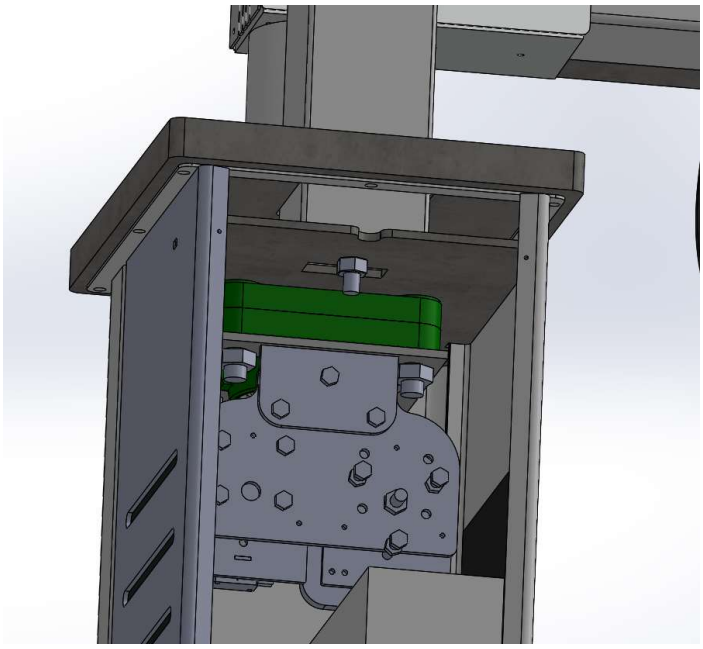

2.1.5. Assembling the chair

1. Fasten chair to the chair column by means of the 4 supplied screws and washers.

2. Fasten each arm rest for the chair by either two or three supplied M6 screws (depending on model).
*****All the screws for assembling the chair and arm rests are already screwed in to their holes in a bottom of the chair.

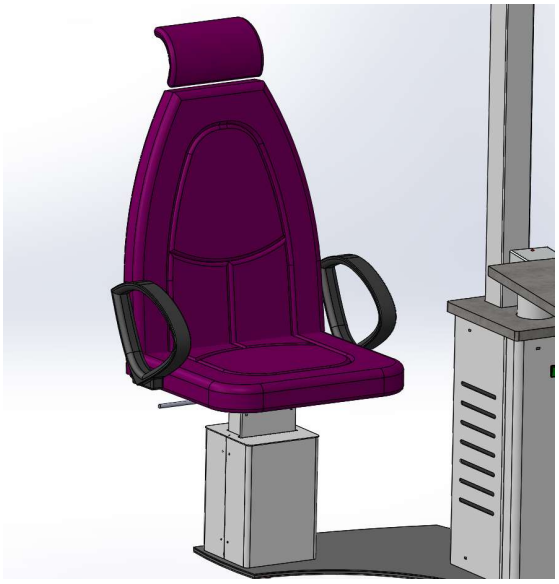

2.1.6. Installation of the (optional) phoropter arm

1. Remove chart projector`s plate.
2. Disconnect both “Lamp” cables.
3. Remove overhead lamp.
4. Put phoropter arm on the nickeled tube.
5. Put on overhead lamp
6. Put on projector`s plate

2.1.7. Installation of chart projector

Chart projector support plate is located on top of the column tube. It is provided with:

- 4 screw-holes at the border of each side (PI, P2, P3, P4) for mounting chart projector
- 2 screw-holes in the middle of the plate (TC and TD) for attaching

the plate to the chart projector's column.

Depending on the type of projector, use either TC or TD screw-hole to attach the plate (either rotated or not rotated of 90°) to the chart projector's column and use either P1 and P2 or P3 and P4 to attach chart projector to the plate.

2.1.8.. Installation of a chin rest

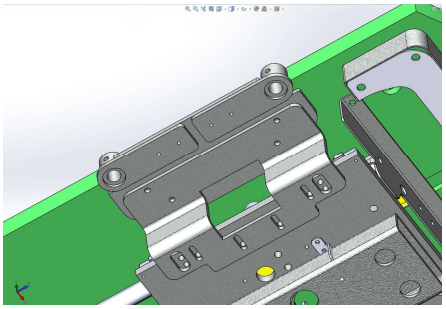

Note: The refraction unit is supplied with the tabletop provided with a chin-rest support plate with two housings. This is suitable for mounting different types of chinrests. To install some other types of chinrests, it could be necessary to make some adaptations.

1. Attach chin-rest support plate in the desired place on the bottom side of tabletop by supplied four screw nails.
2. Put the chinrest in the support housings and fix it by screwing the two 6x8 dowels in the related housings

2.1.9. Installation of Instruments upon the tabletop

1. Install the instruments upon the table top according to the instruction manual of the instrument themselves.

   Attention: be sure that the instruments are well stable during the movement of the tabletop.

   LOW VOLTAGE INSTRUMENTS

Mount the supplied connectors to the power supply cables of the instruments, connecting only the two diametrically opposite poles (central pole is not used). Insert the connectors into the instruments power supply outlets.

Attention: be sure that instruments to be supplied by the power supply outlets present on the tabletop have the same technical specifications as those indicated on the plate sited on the control box, i.e.: 50 VA maximum power, 6 V or 12 V power supply voltage (as specified on the plate).

MAIN VOLTAGE INSTRUMENTS

Replace the plug of the instrument power cord with the supplied connector. Connect main phases to the two diametrically opposite poles (central pole could be used for ground cable). Insert the connector into the instrument power supply outlet on the sliding tabletop.

2.1.10. Main power supply connection

1. Insert the main power cable into the related socket located on the back panel of the chair column base.
2. Insert the plug into a main power outlet.

Attention: be sure that local main voltage corresponds to voltage indicated on the plate sited on the back panel of the column base

3. Use

3.1. Meaning of control panel buttons

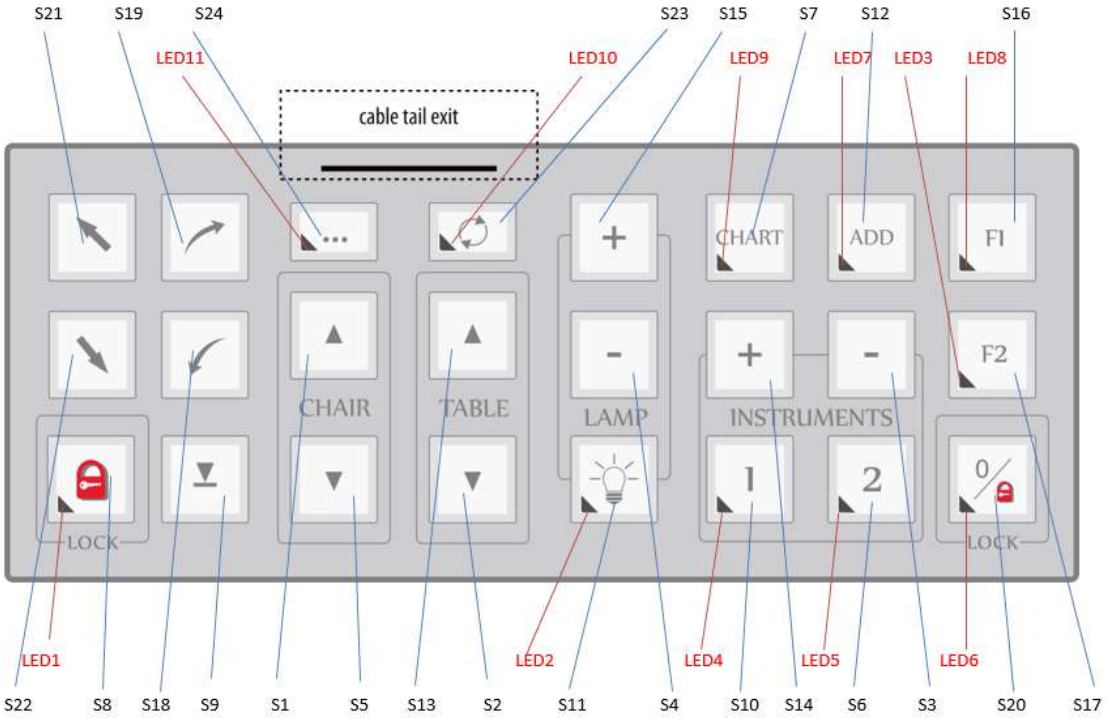

- S1, S5 - Chair UP/DOWN movement control buttons “▲” and “▼”
- S2, S13 - Table UP/DOWN movement control buttons “▲” and “▼” (not in use)
- S3, S14 - Buttons “+” and “-“ for Slit Lamp light intensity control
- S4, S15 - Buttons “+” and “-“ for Overhead Lamp light intensity control
- S6 – Instrument2 power ON/OFF button
- S7 – Chart Projector ON/OFF button
- S8, S20 – Lock button
- S9 - Chair to lowest position
- S10 - Instrument1(slit lamp) power ON/OFF button
- S11 – Overhead Lamp ON/OFF button
- S12 - Additional Instrument power ON/OFF button
- S16 – Functional button 1

- S17 – Functional button 2
- S18, S19 – Chair sliding forward backwards
- S21, S22 – not in use
- S23 – Auto (Liftboy control)(optional)
- S24 – Room Light control (optional)

3.2. Switching on the unit

Turn the main power switch, sited in front panel of console, to ON (1) position.

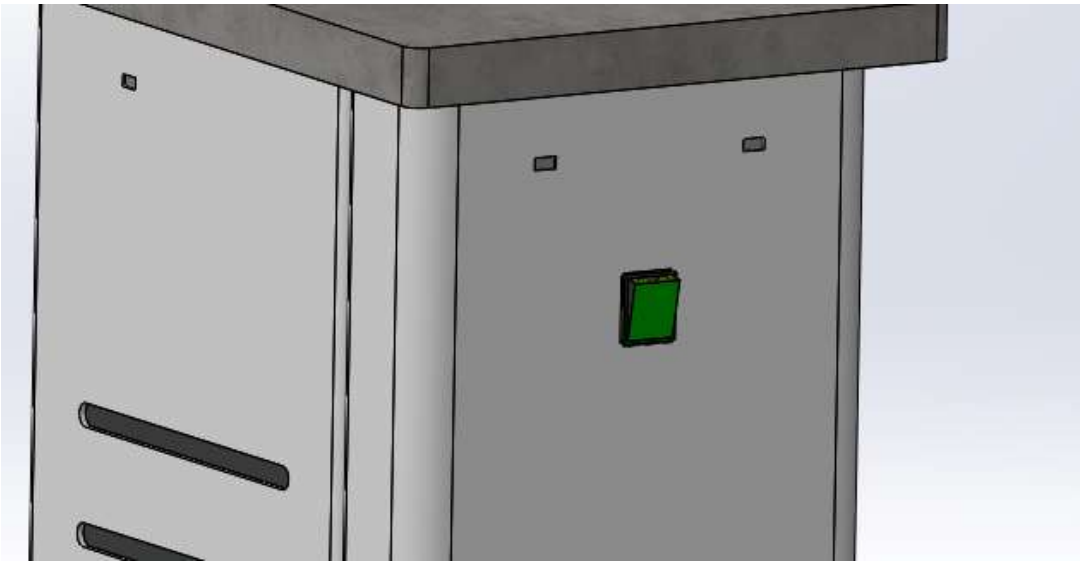

3.3. Moving up/down the chair

Act on the "chair" UP/DOWN buttons “▲” and “▼” on the control panel.

3.4. Rotating the chair

1. Loosen the chair rotation lock lever, sited on the external lateral side of the chair, to unlock rotation.
2. Rotate the chair in the desired position within the allowed rotation range.
3. Lock chair rotation by tightening the chair rotation lock lever.

3.5. Switching on/off overhead light

Act on "Lamp" button on the control panel.

3.6. Switching on/off chart projector

Act on "Projector" button sited on the control panel.

3.7. Instrument light intensity controlling

Use the corresponding button of the control panel to control light intensity of the instrument installed on table top: push button “+” to increase light intensity and button “-“ to decrease it.

("Instr1“ LED should be in the ON position).

3.8. Switching off the unit

Turn the main power switch, sited on the front panel of console, to OFF (0) position.

Remove the power cord plug from the main power socket if the unit going not to be used for a long period.

Horizontal lock of sliding tabletop
Use handle located under the sliding table top to stop horizontal movement of table top.
Move handle to the right to stop horizontal movement of table top.
Move handle to the left to allow horizontal movement of table top.

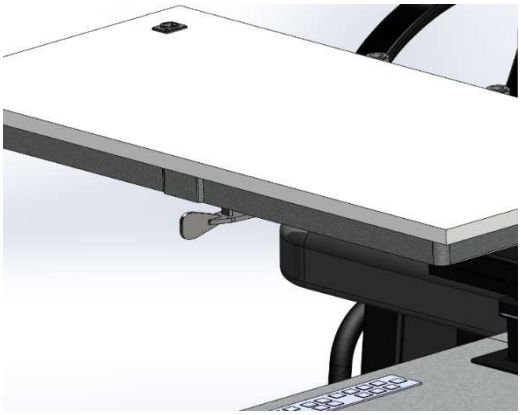

4. Maintenance

Attention: *before any maintenance operation, be sure turn the main power switch OFF (0) and take off the plug from the wall socket.*

4.1. Replacing main protection fuses

Two main delayed fuses are sited in the fuse-holder located just under the main power supply socket on the back side of the chair.

Replace them only with fuses of same values as indicated on the label sited on the back side of the console.

4.3. Cleaning the unit

Attention: *never use alcohol or any solvent to clean the unit, but use a dump cloth.*

Clean the coated surfaces with a cloth moistened (never dripping wet). Please do not use any abrasive or aggressive cleaning supplies. Make sure that no moisture gets in between the keyboard keys. It is advisable to protect the instrument table against dust with a protective hood at the end of each working day, simply because open measuring and examining instruments are inherently sensitive to dust.

5. Labels

The label with CE mark and product electrical data is located on the rear side of the column base.

Selecting, setting and adjusting voltages for instruments on table top of CAPRI

Related components

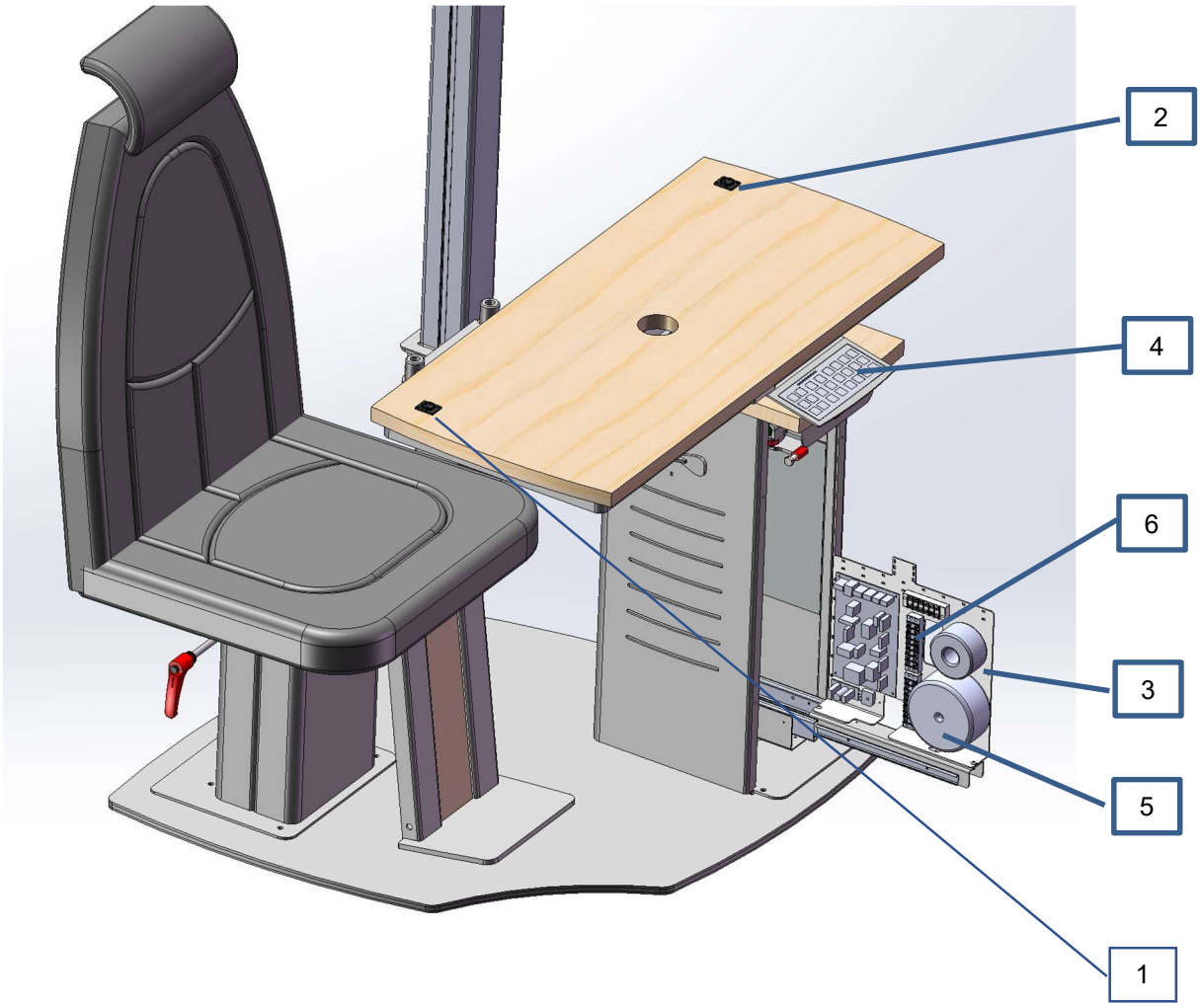

1. Outlet for 1st instrument
2. Outlet for 2nd instrument
3. Electrical block
4. Operational panel
5. Power transformer for instruments, lamp and lock electromagnet
6. Voltage selector

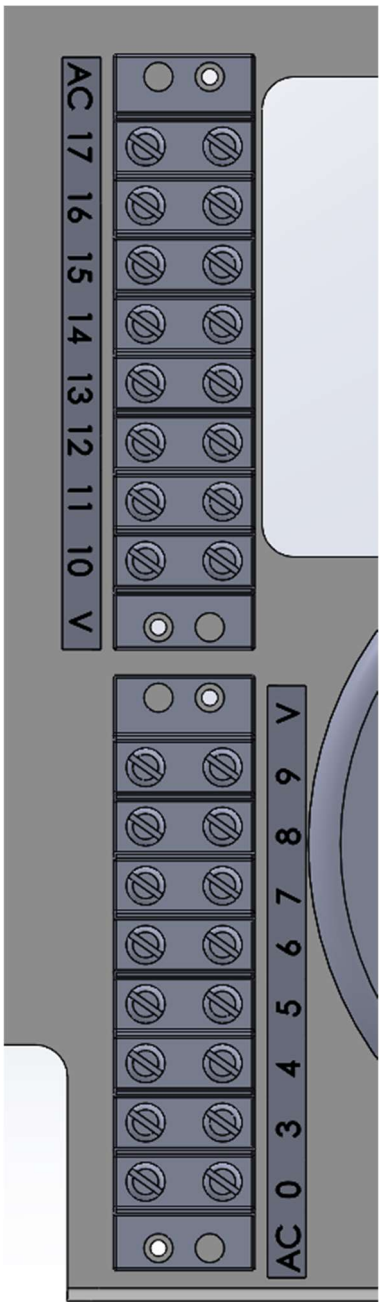

Voltage selector

The following wires are connected to voltage selector:

- "0V" – common wire, must be always connected to 0V
- "A" – power supply for Channel A
- "B" – power supply for Channel B
- "Lamp" – power supply for Lamp, connected to 20V
- 3 wires for lock electromagnet, they are already connected at factory

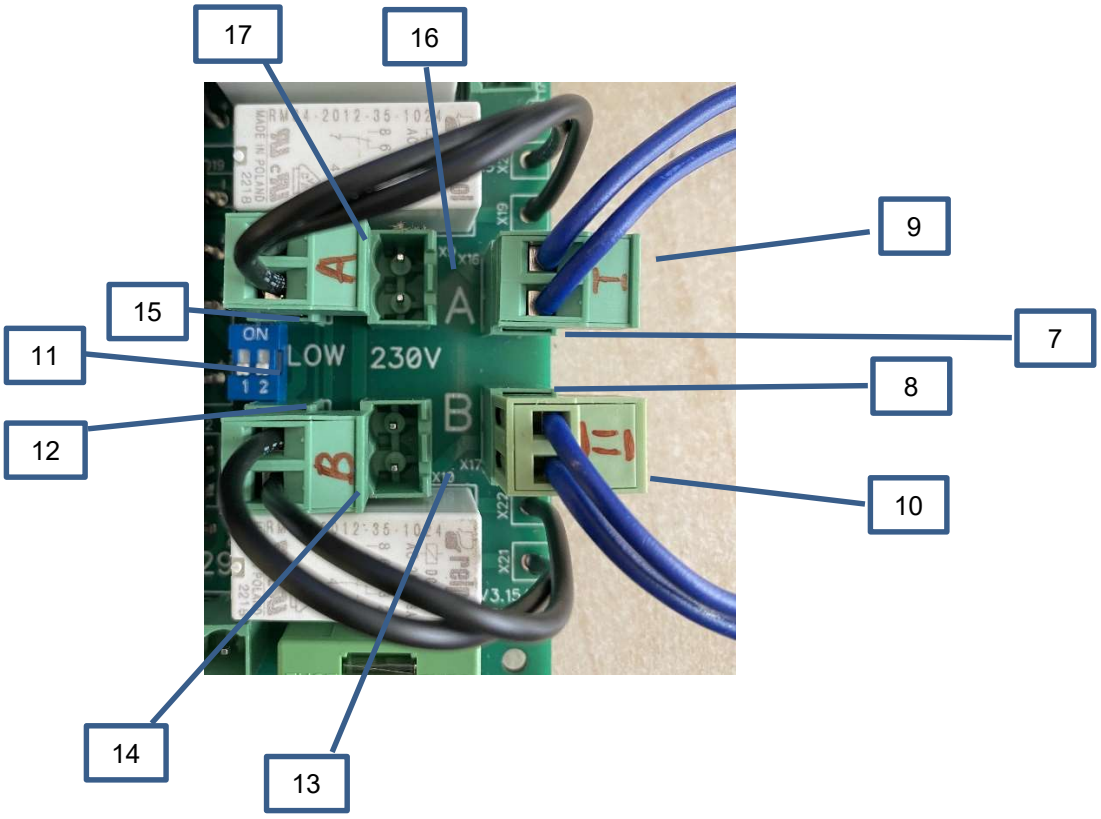

7. Socket. Outlet of channel A.
8. Socket. Outlet of Channel B
9. Plug. Wires to the 1st position (1) on table top
10. Plug. Wires to the 2nd position (2) on table top
11. DIP switch No1 for selecting of channel
12. Socket. Channel B. Low voltages 3-17V
13. Socket. Channel B. 230V
14. Selector Plug. Channel B
15. Socket. .Channel A. Low voltages 3-17V
16. Socket. Channel A. 230V
17. Selector Plug. Channel A

Operational Panel

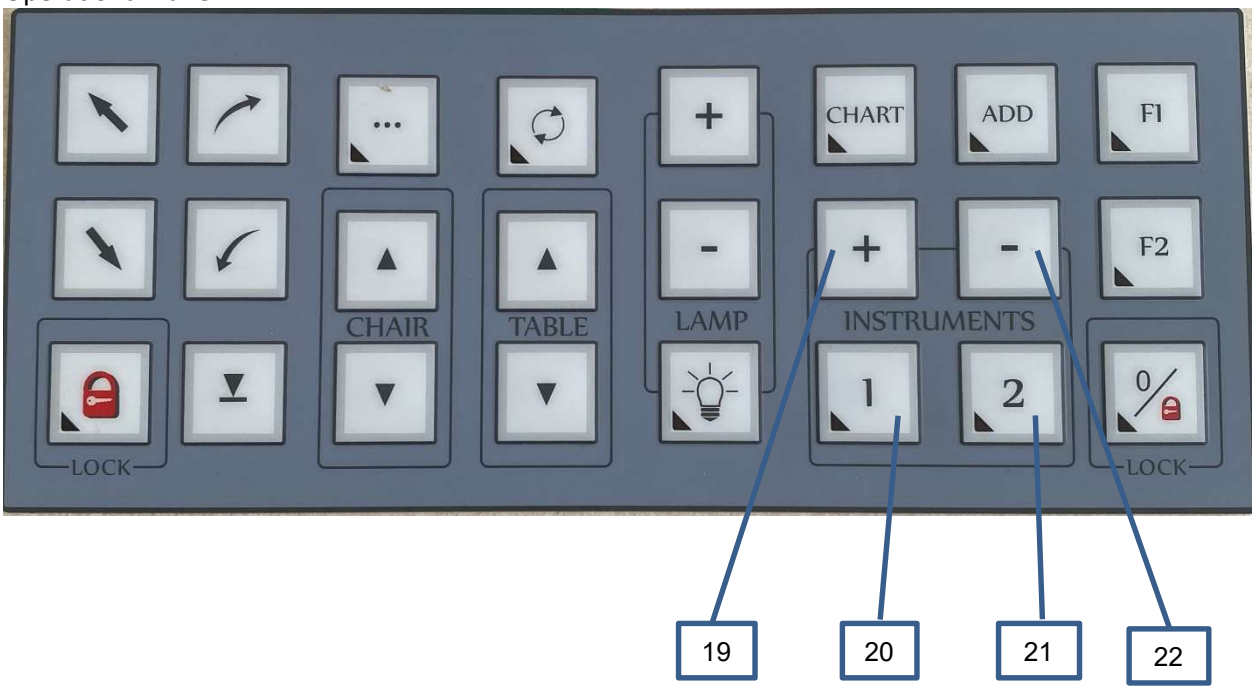

19. Dim button to increase the light intensity of instrument
20. 1st instrument on/off
21. 2nd instrument on/off
22. Dim button to decrease the light intensity of instrument

Choosing the right channel: A or B

Each instrument: 1st or 2nd can be connected to one of channels: A or B.

Channel A can give the following voltages:

- Dimmable low voltage. Any diapason from AC 5 to 19V
- AC 230V

Channel B can give the following voltages:

- Fixed AC voltage from 5 to 19V (step 1V)
- AC 230V

If 1st instrument should be connected to channel A:
plug (9) must be inserted into outlet socket of channel A (7).
Selector Plug A (17) should be inserted into one of sockets: (15) for low voltage or (16) for 230V.
DIP switch No1 (11) must be switched ON

If 1st instrument should be connected to channel B:
plug (9) must be inserted into outlet socket of channel B (8).
Selector Plug B (14) should be inserted into one of sockets: (12) for low voltage or (13) for 230V.
DIP switch No1 (11) must be switched OFF (set to the direction of Channel B).

If 2nd instrument should be connected to channel A:
plug (10) must be inserted into outlet socket of channel A (7).
Selector Plug A (17) should be inserted into one of sockets: (15) for low voltage or (16) for 230V.
DIP switch No1 (11) must be switched OFF

If 2nd instrument should be connected to channel B:
plug (10) must be inserted into outlet socket of channel B (8).
Selector Plug B(14) should be inserted into one of sockets: (12) for low voltage or (13) for 230V.
DIP switch No1 (11) must be switched ON

Choosing low voltages for channels A and/or B in voltage selector

To assign any voltage for channel A, connect wire marked “A” to necessary voltage in voltage selector.
To assign any voltage for channel B, connect wire marked “B” to necessary voltage in voltage selector.

Setting min and max values of low voltage for channel A

For example, channel A is assigned to 1st instrument on table top. 1st instrument requires dimmable 6V .
In this case:
plug (9) is inserted into the socket (7),
plug 17 is inserted into the socket (15),
DIP switch No1 is ON.

To set min and max values proceed as follows:

- Connect wire marked “A” to contact 6V or 7V in voltage selector (6)
- 1st instrument must be off (LED on button “1” (20) must be off)
- Press and keep pressed button “1”(20) for about 6 seconds until beep will occurs
- Bulb of instrument will turn on, LED on button (20) will start blinking
- Press button (19) until you get max voltage you need for the instrument. At the moment of releasing button (19) you will have **max** programmed voltage for channel A.
  If you cannot get requested voltage, just drop wire marked “A” to higher voltage in voltage selector (6)
- Press button (22) until you get min voltage you need for the instrument. At the moment of releasing button (22) you will have **min** programmed voltage for channel A.
- Press button “1” or “2” to memorize min and max values. Double beep will follow.

EXAMPLES

Example No1
You have the following configuration:
1st instrument – 12V dimmable
2nd instrument – 12V fixed

1st instrument requires dimmable voltage, accordingly it must be assigned to channel A

- Wire marked “A” connected to one voltages 12-13-14-15-16 V (depending on power of bulb and voltage dropping)
- Wire marked “B” connected to one voltages 12-13-14-15-16 V (depending on power of bulb and voltage dropping)
- Plug (9) – in socket (7) (1st instrument in outlet of channel A)
- Plug (17) – in socket (15) (Selector of channel A connected to LOW voltage)
- Plug (10) – in socket (8) (2nd instrument in outlet of channel B)
- Plug (14) – in socket (12) (Selector of channel B connected to LOW voltage)
- DIP switch No1 – ON (button”1” on operational panel operates channel A) (button”2” on operational panel operates channel B)

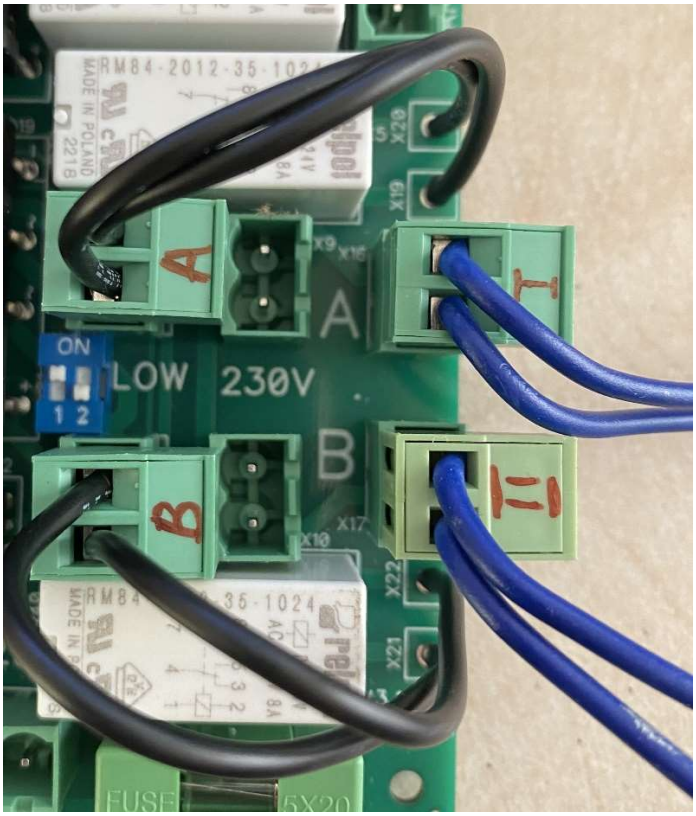

Example No2
You have the following configuration:
1st instrument – 230V
2nd instrument – 12V dimmable

2nd instrument requires dimmable voltage, accordingly it must be assigned to channel A

- Wire marked “A” connected to one voltages 12-13-14-15 V (depending on power of bulb and voltage dropping)
- Wire marked “B” connected to any voltage
- Plug (9) – in socket (8) (1st instrument in outlet of channel B)
- Plug (14) – in socket (12) (Selector of channel B connected to 230V)
- Plug (10) – in socket (7) (2nd instrument in outlet of channel A)
- Plug (17) – in socket (16) (Selector of channel A connected to LOW voltage)
- DIP switch No1 – OFF (button”1” on operational panel operates channel B)
  (button”2” on operational panel operates channel A)

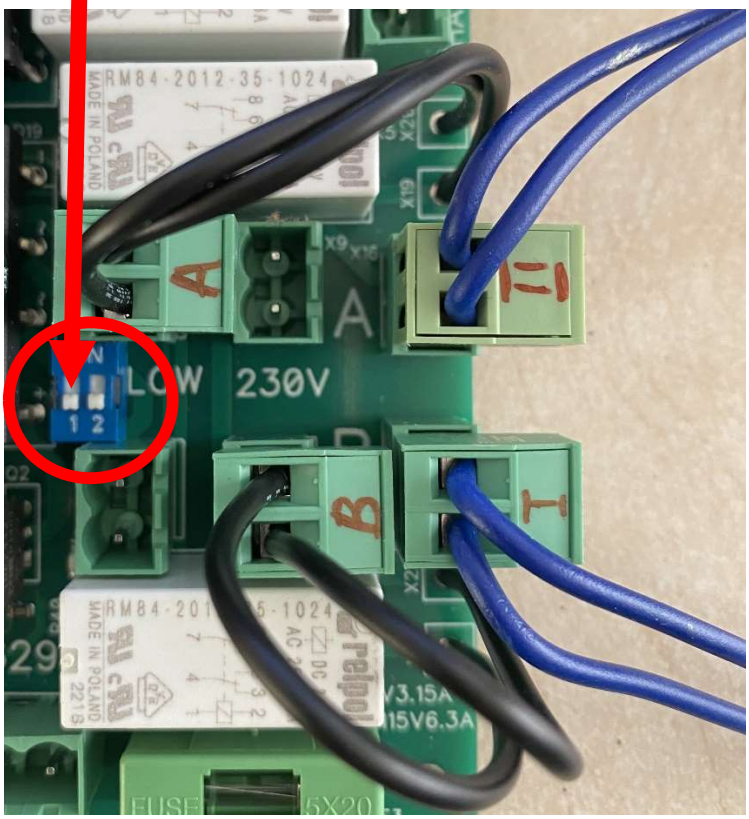

Example No3
You have the following configuration:
1st instrument – 230V
2nd instrument – 230V

- Wire marked “A” connected to any voltage
- Wire marked “B” connected to any voltage
- Plug (9) – in socket (7) (1st instrument in outlet of channel A)
- Plug (17) – in socket (16) (Selector of channel A connected to 230V)
- Plug (10) – in socket (8) (2nd instrument in outlet of channel B)
- Plug (14) – in socket (13) (Selector of channel B connected to 230V)
- DIP switch No1 – ON (button”1” on operational panel operates channel A)
  (button”2” on operational panel operates channel B)

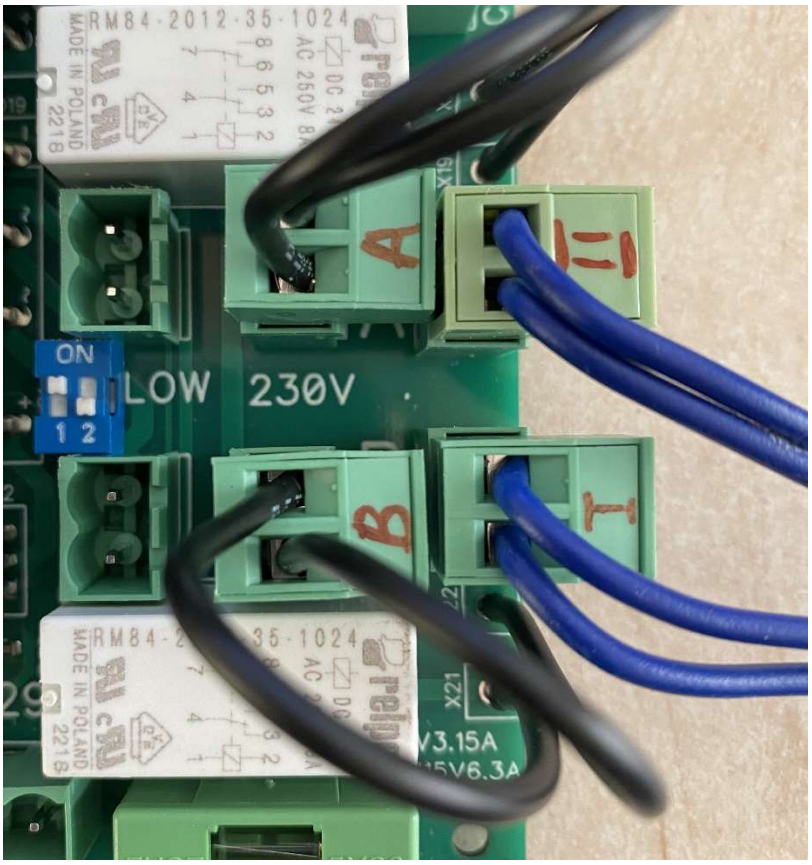

Example No4
You have the following configuration:
1st instrument – 19V dimmable
2nd instrument – 230V permanent (always on as soon as unit is powered on)

1st instrument requires dimmable voltage, accordingly it must be assigned to channel A

- Wire marked “A” connected to one voltages 9-10-11-12 V (depending on power of bulb and voltage dropping)
- Wire marked “B” connected to any voltage
- Plug (9) – in socket (7) (1st instrument in outlet of channel A)
- Plug (17) – in socket (15) (Selector of channel A connected to LOW voltage)
- Plug (10) – in socket (13) (2nd instrument in outlet of 230V of channel B)
- Plug (14) – free/not inserted
- DIP switch No1 – OFF (button”1” on operational panel operates channel A)
  (button”2” on operational panel operates channel B)

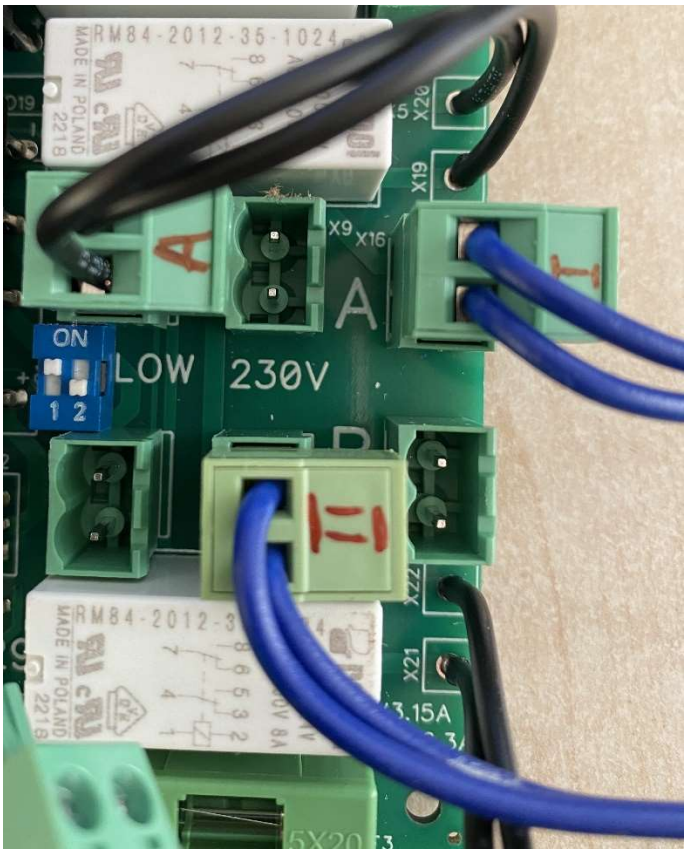

Example No5
You have the following configuration:
1st instrument – 230V permanent (always on as soon as unit is powered on)
2nd instrument – 230V permanent (always on as soon as unit is powered on)

- Wire marked “A” connected to any voltage
- Wire marked “B” connected to any voltage
- Plug (9) – in socket (16) (1st instrument in outlet of 230V of channel A)
- Plug (17) – free/not inserted
- Plug (10) – in socket (13) (2nd instrument in outlet of 230V of channel B)
- Plug (14) – free/not inserted
- DIP switch No1 – ON (button”1” on operational panel operates channel A)
  (button”2” on operational panel operates channel B)

